Isode

WEB BROWSING OVER HF

Steve Kille

CEO Isode Ltd

18th March 2021

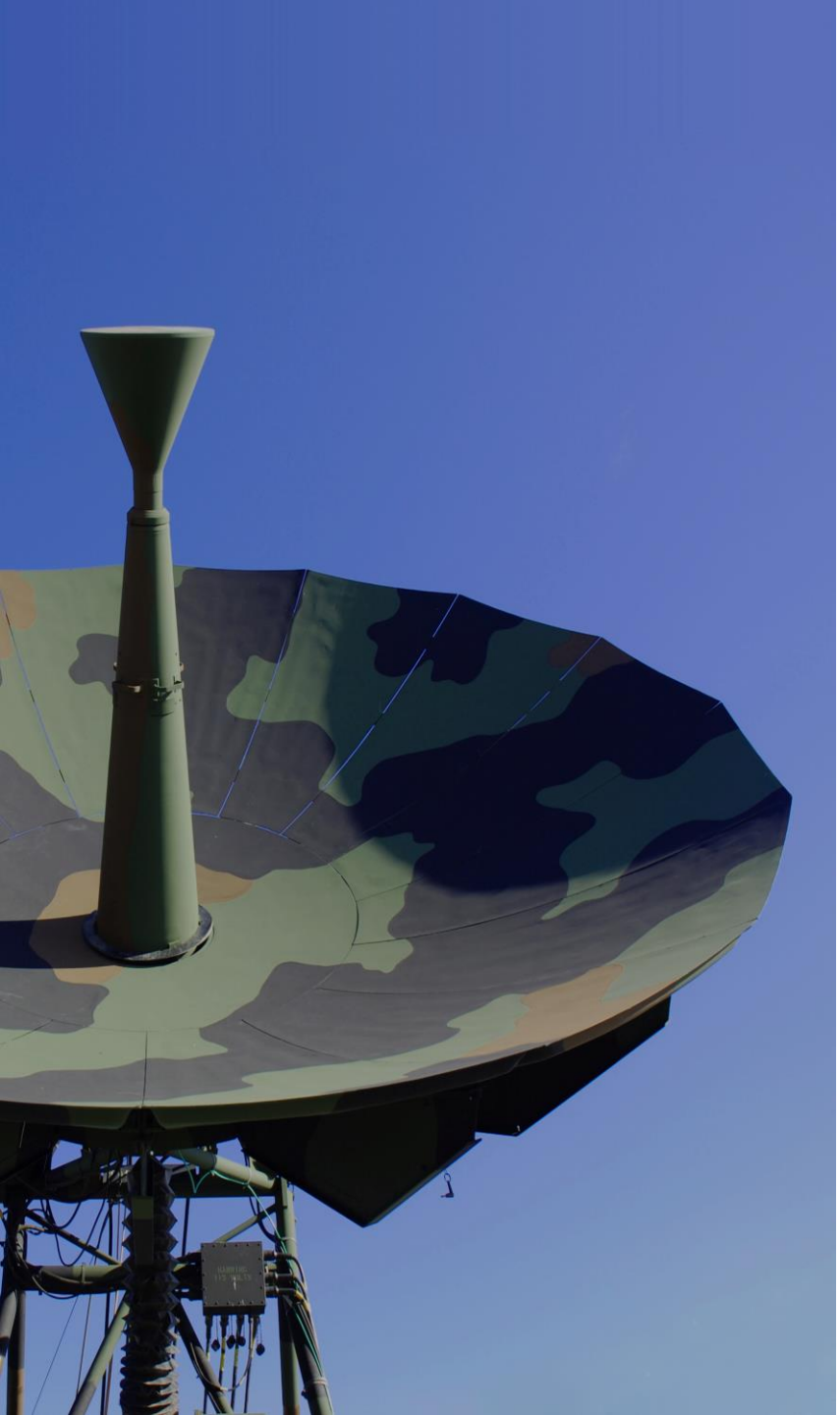

Contents

- Why Web Browsing over HF?
- Technology to make it work
- Tuning considerations
- Results

Why Browse Web over HF?

- Classic HF Services, such as Messaging and XMPP, are “push” services
- To support a Mobile Unit connected over HF, “push” services are core:
  - Sender can choose to send only relevant material in appropriately compact format
- Web browsing provides a complementary “pull” service
- It is not realistic to perform extensive general purpose Web browsing over HF
- However, it is quite realistic to allow a Mobile Unit access to Web Sites and Web accessible databases which have been tuned for HF
  - Allows “pull” access to data sources

SLEP Streaming Service over HF

- Most IP applications operate over a streaming service provided by TCP
- A key building block for Web over HF is Streaming over HF
- SIS Layer Extension Protocol (SLEP)
  - An open protocol specification developed by Isode
  - S5066-APP3 – part of the STANAG 5066 Application Protocol (S5066-APP) document series
  - Includes a streaming service
- Build on the STANAG 5066 ARQ service
  - Layers multiple bidirectional streams
  - Needs to allow for ARQ loss (the service cannot be treated as fully reliable)
- Works well, with low overheads
- The most complex component for Web over HF

HF-PEP – Providing TCP End to End

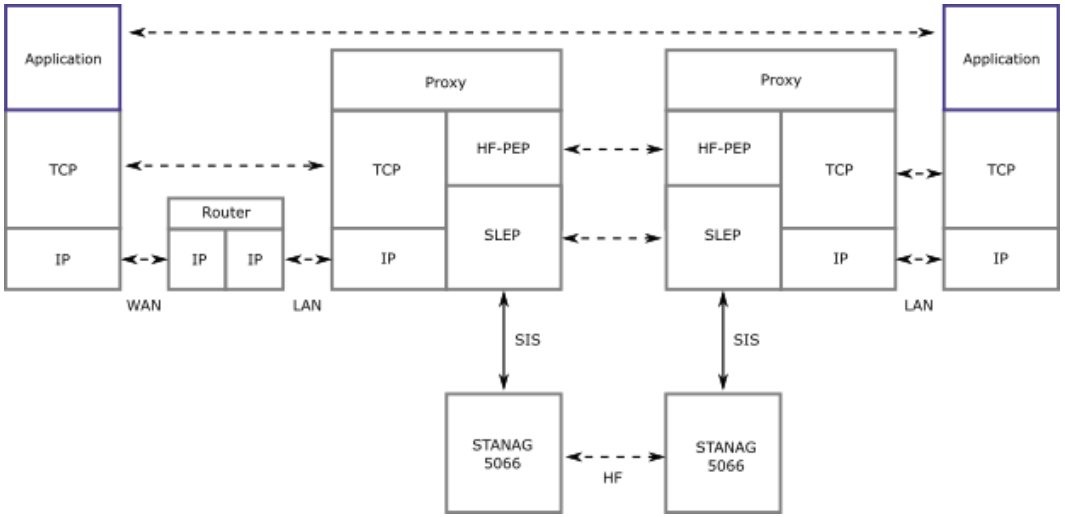

- To provide efficient end to end TCP over HF, a Performance Enhancing Proxy (PEP) is needed
- PEPs use optimized protocols over constrained links

- S5066-APP9 specifies "HF-PEP: STANAG 5066 TCP Performance Enhancing Proxy Protocol"
  - Open specification
- HF-PEP is a thin layer built over SLEP
  - Shares TCP Connection Information and then streams data

Icon-PEP – Isode's HF-PEP Product

- Icon-PEP is Isode's product that support HF-PEP
  - Supports HF-PEP/SLEP to enable any TCP application to operate over HF
  - Provides efficient TCP PEP
- Also supports IP Client, as specified in STANAG 5066
  - Simple mapping of IP onto STANAG 5066
  - Supports IP services other than TCP
  - Useful for basic services such as ICMP Ping
  - Important for DNS (Domain Service) which is central to most Web Browsing

IP Routing over HF

- When applications communicate over IP, traffic passes over multiple subnets
- IP subnets are connected by IP routers
- Icon-PEP supports an IP Subnet over HF
  - Direct routing of packets
  - HF-PEP optimization of TCP
- Note relationships of Icon-PEP with IP Router
  - It is *not* connecting to a host

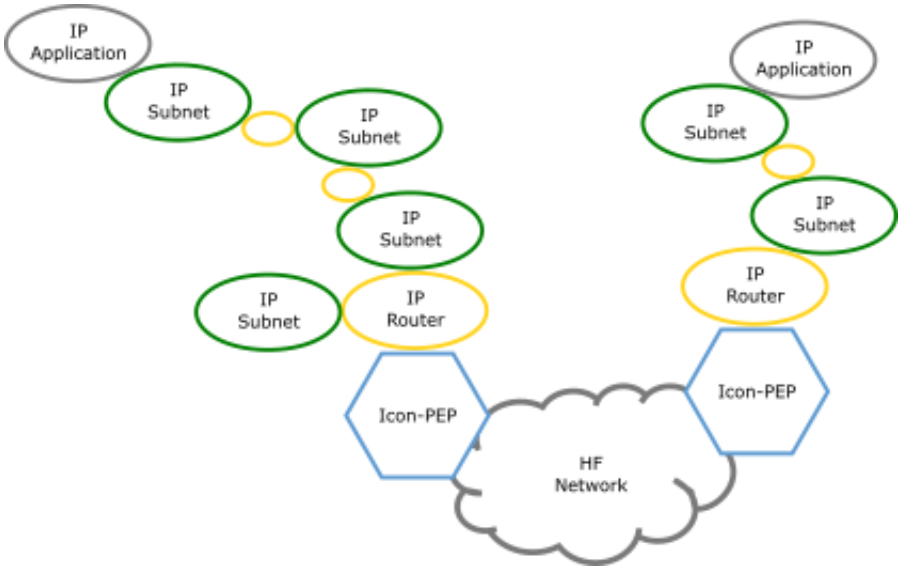

Icon-PEP integration with IP Routing

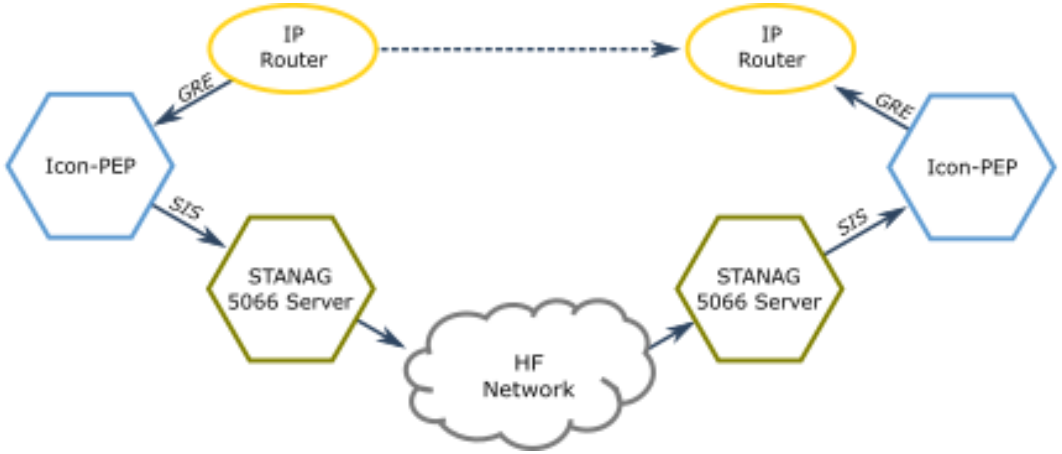

- Icon-PEP communicates with HF Network using STANAG 5066
  - STANAG 5066 SIS protocol used to connect to STANAG 5066 Server
- Icon-PEP communicates with an IP router using GRE
  - RFC 2784 “Generic Routing Encapsulation (GRE)”
  - Widely supported by routes
  - Flexible and simple way to integrate

Web over HF Architecture

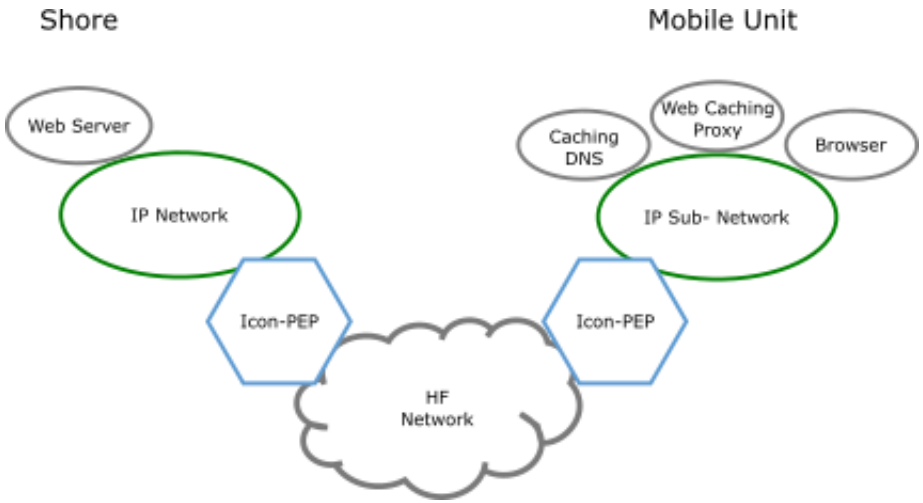

- Web Browsers connect to Web Servers over TCP Links
- So with Icon-PEP the core to give Mobile Unit access to Web is Browser on the Mobile Unit and Web Server on Shore

- Icon-PEP gives an efficient TCP service
  - Applications “just work”
- Also need:
  - Caching DNS
  - Web Caching Proxy
  - Discussed in next slide

Caching Considerations

- It is important to avoid transferring the same data multiple times
- Caching DNS Server is important on Mobile Unit
  - DNS (Domain) lookup is important for Web browsing
  - Lookups over HF are slow
  - Need to cache locally
- Web Caching Proxy is important
  - When a user retrieves a Web page (or Web page component) it is desirable that this remains available for repeat use and use by other users
  - Web Caching Proxy provides this service
  - It can also provide other services such as access control and audit
  - Isode recommends Squid (free and widely used)

Icon-PEP Considerations

- Minimizing handshaking is key to optimizing performance
  - Each handshake adds several seconds of delay
- Web browsers often open multiple connections to a Web server
  - For example Chrome usually opens two
- HTTP queries typically start with amount of data
- Performance optimized by small delays in sending, to allow data to be efficiently bundled and avoid handshakes

Browser Considerations

- Browser timers are not ideal for HF
  - Some data timers would be better if longer
  - Default DNS timeout is generally slightly too short and generally forces user to try again
    - Caching DNS helps here
- Work to address this suggests:
  - Some browsers do not allow configuration
  - Some browsers that do allow configuration, but too complex to sensible adjust
- Conclusion is that the pragmatic approach is to live with default settings
  - Generally this works OK

Web Server Considerations

- Most typical default settings and Web server products work well
- Browsers try to maintain TCP connections for repeat use
  - Key performance optimization
- Web servers time out these connections
  - Timer controlled by HTTP Keepalive setting
- Typical default HTTP Keepalive timeout is 6-10 seconds
  - This is way to short for HF
  - Timeouts lead to significant performance degradation over HF
- For a Web server providing data for clients over HF, it is important to set HTTP Keepalive to a few minutes

Web Site Considerations

- Most Web sites do things that are not ideal for HF
  - This page looks at key considerations
- Don’t use TLS
  - Adds in handshakes (delay)
  - Prevents pages being cached and being shared between Mobile Unit users
- Keep the number of files comprising the Web site small
  - Many sites use a large number
  - It is possible to make home page with three files and other site pages with a single file
- Don’t reference files with different DNS names
  - This adds delay
- Use site structure to avoid very large Web pages
  - Warn about large (critical) files, so they can be avoided unless really needed
- Avoid large blocks of data, such as:
  - Big Pictures
  - Non-standard fonts
  - Large JavaScript programs

A Sample Web Site for HF – hf-browse.com

- Isode has developed a site suitable for HF
  - On the Internet
  - hf-browse.com
- Using data from Isode's Web site
- Most pages are usable over top end narrowband HF (4800-9600 bps)
- Home page and page shown can work down to 1200 bps
  - Not fast, but usable
  - Reasonable data rendering can be achieved; does not need to look like a Teletype

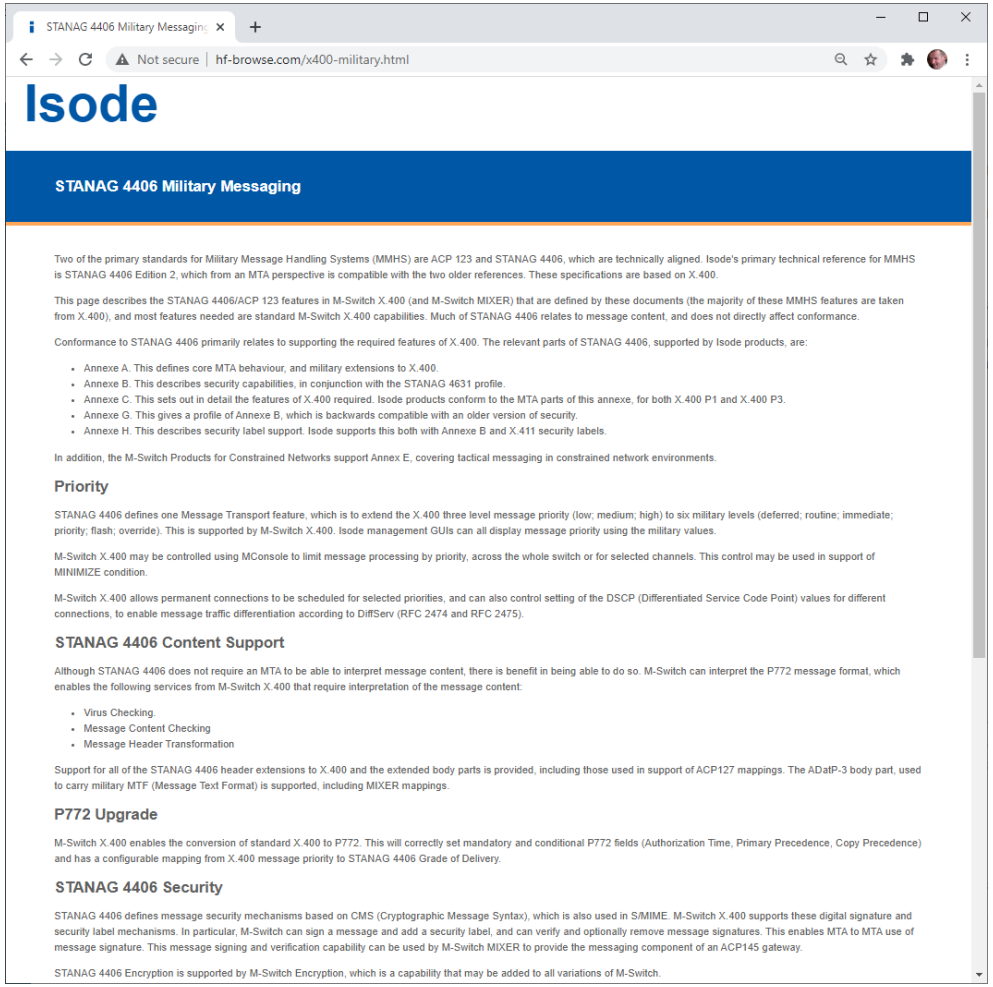

Results

- Web Browsing over HF is achievable
- Isode's Icon-PEP product provides this
  - Demonstrated in the lab and Over The Air
- Operation with Web Servers and Sites tuned for HF is usable with top end Narrowband HF
  - And with care down to 1200 bps
- WBHF Helps a lot
  - Enables more data to be usefully shared
  - Allows many standard Web sites to be accessed
    - Generally "usable" but not what would be expected on a fast link
- Can provide a "pull" service to Mobile Units to complement current "push" services

Any Questions?